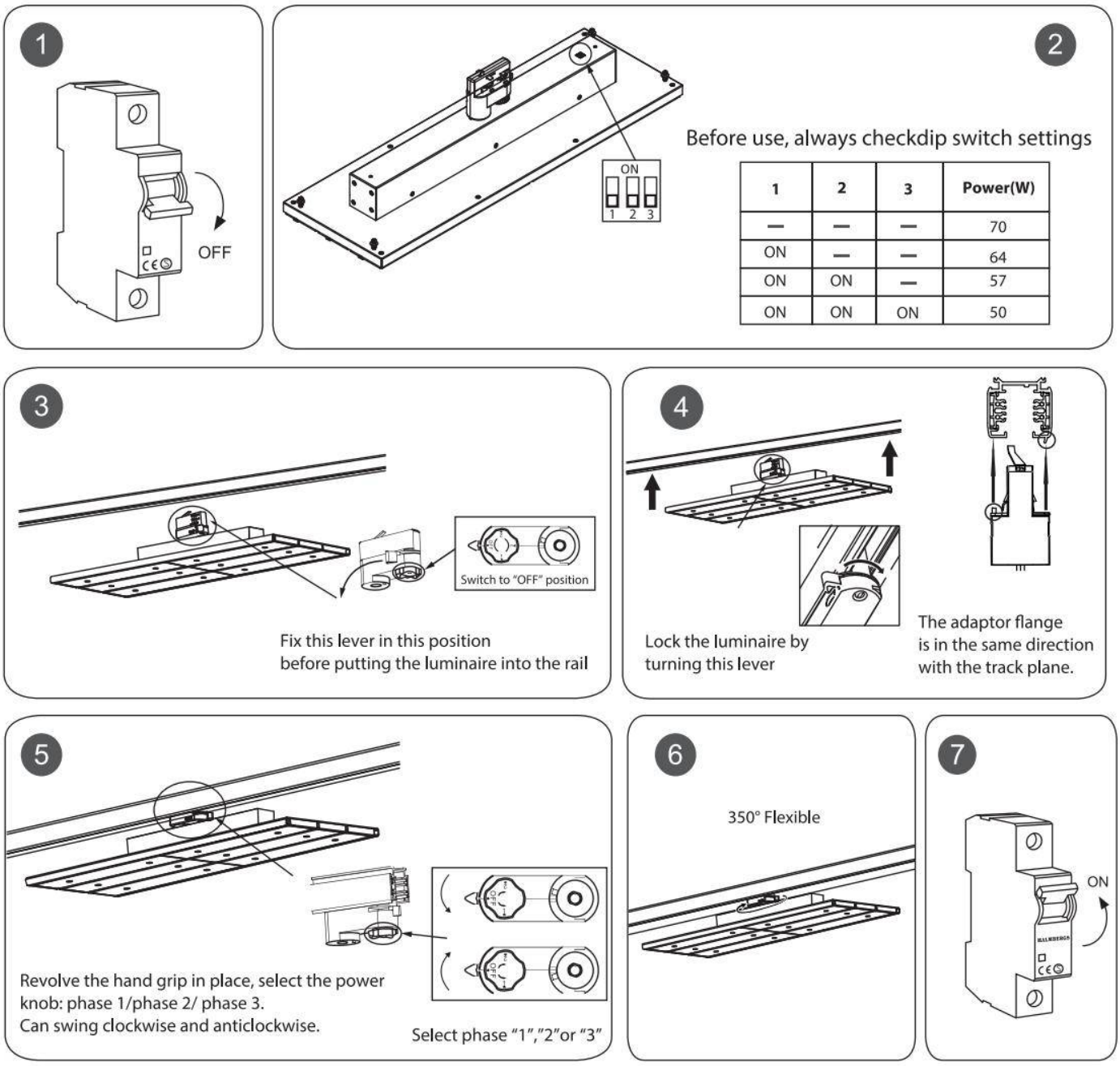

1	2	3	Power(W)
—	—	—	70
ON	—	—	64
ON	ON	—	57
ON	ON	ON	50